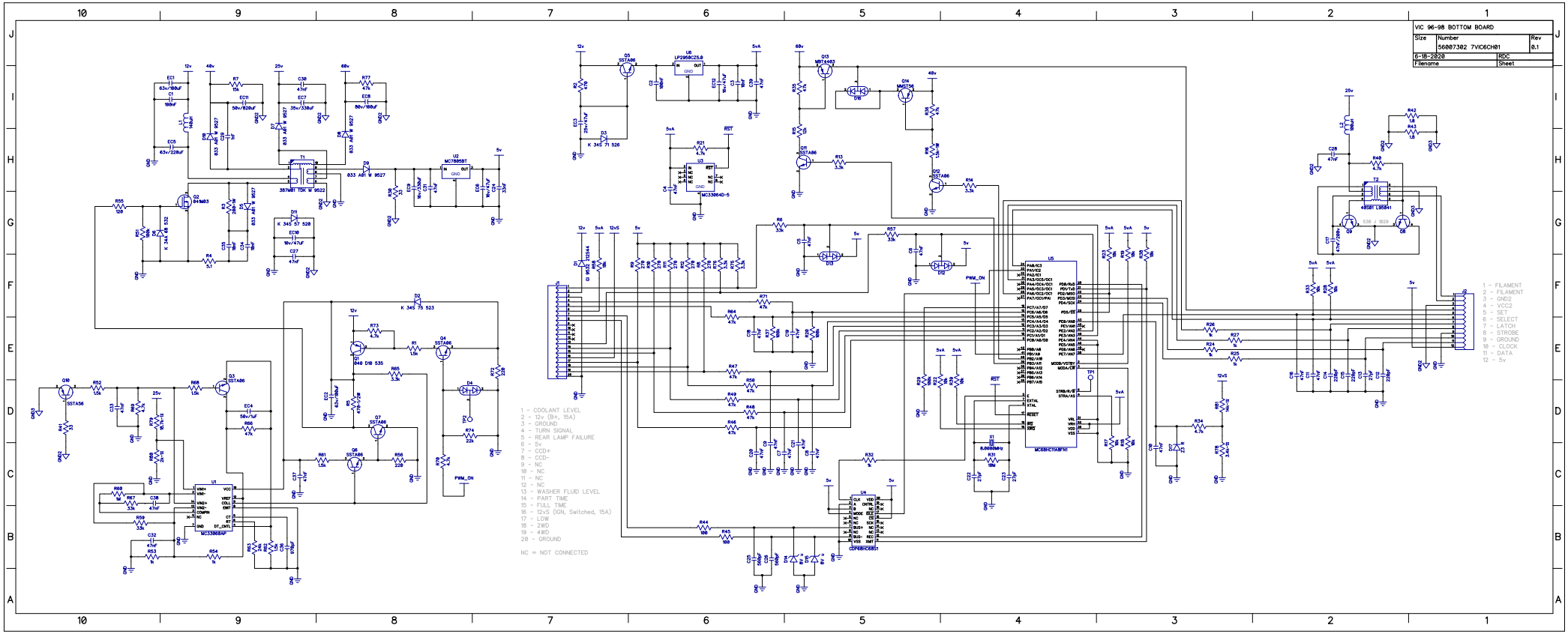
VIC 96-98 BOTTOM BOARD
Size
Number
56007302 7VIC6CH01
Rev
0.1
6-15-2020
RDC
Filename
Sheet
1 - COOLANT LEVEL
2 - 12v (B+, 15A)
3 - GROUND
4 - TURN SIGNAL
5 - REAR LAMP FAILURE
6 - 5v
7 - CCD+
8 - CCD-
9 - NC
10 - NC
11 - NC
12 - NC
13 - WASHER FLUID LEVEL
14 - PART TIME
15 - FULL TIME
16 - 12v5 (IGN, Switched, 15A)
17 - LOW
18 - 2WD
19 - 4WD
20 - GROUND
NC = NOT CONNECTED
1 - FILAMENT
2 - FILAMENT
3 - GND2
4 - VCC2
5 - SET
6 - SELECT
7 - LATCH
8 - STROBE
9 - GROUND
10 - CLOCK
11 - DATA
12 - 5v